Flow valve
Throttle valve

Q_{max} = 15 gpm, p_{max} = 3600 psi
Direct acting, spool type, proportional solenoid
Type series: MDT42AK2NNY-5...

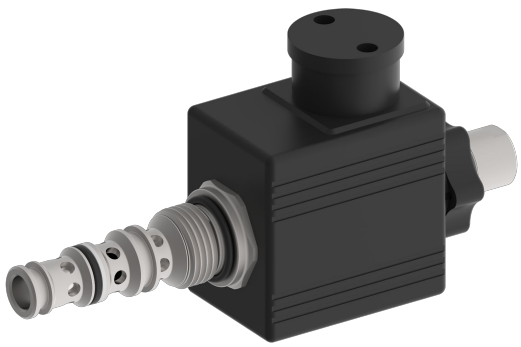

- Screw-in cartridge valve for cavity AN
- All external parts with zinc-nickel plating according to DIN EN ISO 19598
- Dual flow paths for higher flow rate
- For use with inline or bypass pressure-compensator cartridges
- Optional with emergency manual flow setting
- Reliable operation over the whole pressure and flow range (even with high pressure differentials)
- High pressure wet-armature solenoids
- The slip-on coil can be rotated, and it can be replaced without opening the hydraulic envelope
- Various plug-connector systems and voltages are available

Symbol

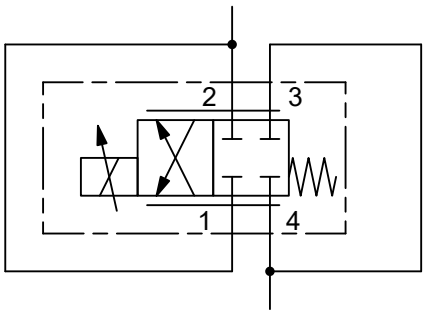

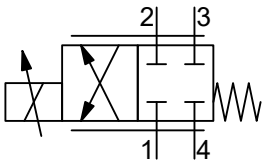

Description

The direct acting, 4/2 proportional throttle valve is a high-performance threaded screw-in cartridge valve in size 05 with dual flow paths. The valve is designed on the sliding-spool principle. The dual flow paths allow a higher flow rate with low headloss. This requires connecting port 3 to port 4 and port 1 to port 2 in the valve housing (cavity in manifold block. See "Dual flow paths"). When de-energized, the connections from 3 to 1 and from 4 to 2 are disabled. When energized, the flow rate from 3 to 1 and from 4 to 2 can be adjusted in proportion to the required value (current). The valve is used with an inline compensator or a bypass hydrostat, predominantly in mobile and industrial applications for precise proportional control of flow rates. The valve is

available with an optional push-button override with a pin (Type "P") or with a screw-type emergency override (Type “S”) including an integrated emergency manual flow setting. The slip-on coil can be replaced without opening the hydraulic circuit and can be positioned at any angle through 360°.

Technical data

General characteristics	Description, value, unit
Function group	flow valve
Function	throttle valve
Design	screw-in cartridge valve
Controls	proportional solenoid
Characteristic	direct acting, spool type
MTTFd value	150 years
Construction size	NG 05
Thread size	3/4-16 UNF-2A
Mounting attitude	unrestricted (preferably vertical, coil down)
Weight	1.21 lb
Cavity acc. factory standard	AN
Tightening torque steel	30 ft·lb
Tightening torque aluminium	30 ft·lb
Tightening torque tolerance	± 10 %
Minimum ambient temperature	- 13 °F
Maximum ambient temperature	+ 140 °F
Surface protection	all external parts with zinc-nickel plating according to DIN EN ISO 19598
Seal kit order number	NBR: DS-248-N / FKM: DS-248-V

Hydraulic characteristics	Description, value, unit
Maximum operating pressure	3600 psi
Maximum flow rate	15 gpm
Nominal flow rate	Δp 145 psi: 12 gpm
Flow direction	see symbol
Hydraulic fluid	HL and HLP mineral oil according to DIN 51 524; other fluids on request!
Minimum fluid temperature	- 22 °F
Maximum fluid temperature	+ 158 °F
Viscosity range	15 ... 380 mm^2/s (cSt)
Recommended viscosity range	20 ... 130 mm^2/s (cSt)
Minimum fluid cleanliness (cleanliness class according to ISO 4406:1999)	class 18/16/13
Internal leakage flow rate	< 2.1 in3/rev (with pN 3600 psi) with oil viscosity 33 mm2/s (cSt)

Electric characteristics	Description, value, unit
Actuator type	solenoid coil
Solenoid coils type	36X48/16.1
Supply voltage DC	12 V DC 24 V DC
Control current	12 V = 0...1600 mA 24 V = 0...800 mA
Nominal power consumption	30 W
Relative duty cycle	100 %
Recommended PWM frequency	150 Hz
Response sensitivity with PWM	< 2 % I_{max}
Reproducibility with PWM	< 3 % Q_{nenn}
Hysteresis with PWM	2...5 % I_{max}
Reversal error with PWM	2...5 % I_{max}
Electrical connection coil	several connection types available, see ordering code
Protection class solenoid coil to ISO 20 653 / EN 60 529	IP 65 / IP 67 / IP 69K, see Ordering code (with appropriate mating connector and proper fitting and sealing)

Performance graphs

measured with oil viscosity 33.0 mm²/s (cSt)

Δp = f (Q) Pressure drop-flow rate characteristic

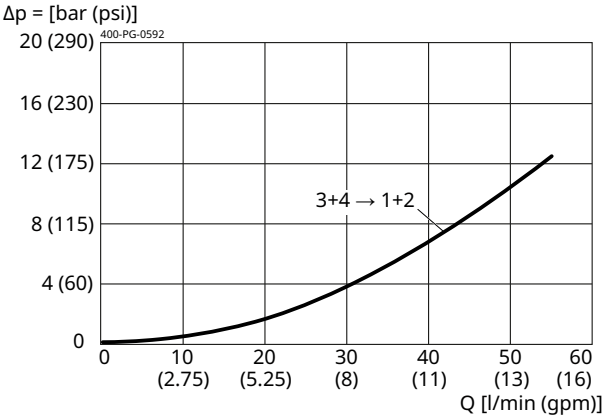

Q = f (I:Δp) Flow rate adjustment

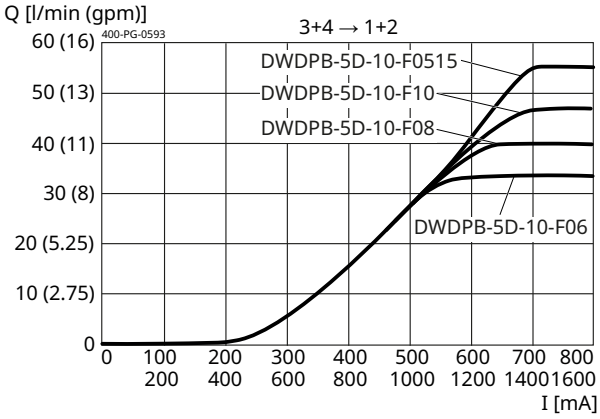

Q = f (pl) Flow rate load-pressure

Meas. with pressure compensator DWDPB-5D-10-F08

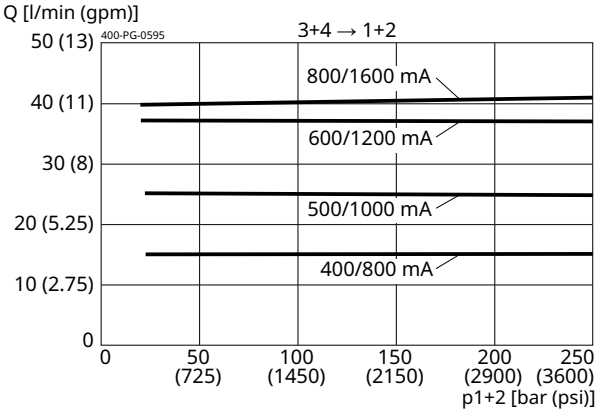

Installation

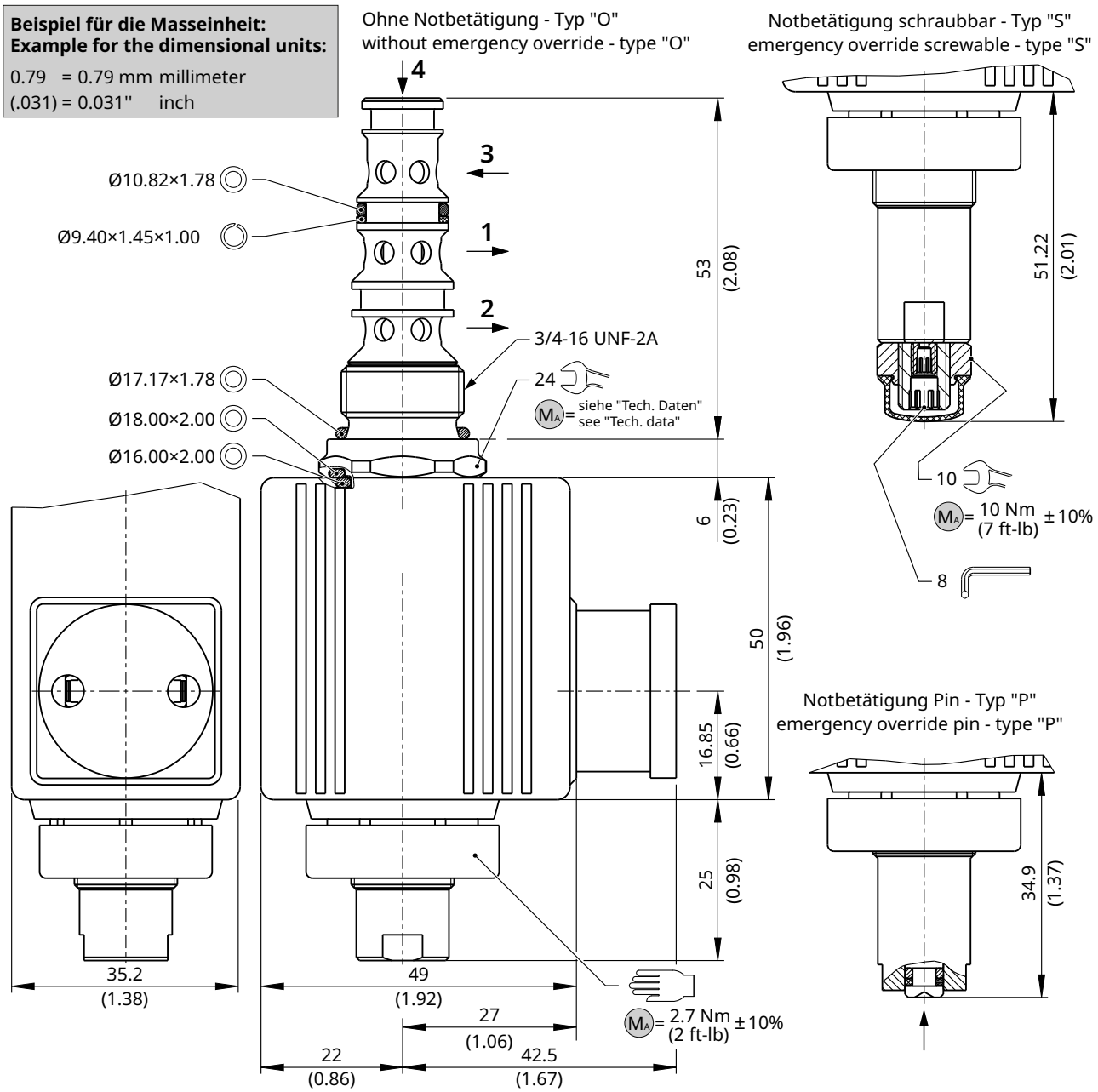

NOTE!

- Observe tightening torques M_A.
- Mount the valve preferably suspended (automatic air bleed).
- The valve is factory-set, no further adjustments are necessary.

IMPORTANT!

Prerequisite to achieve the valve's maximum performance rating:

- the solenoid is mounted aligned as depicted.
- mounted in a steel body.

ATTENTION!

Only qualified personnel with mechanical skills may carry out the following work:

- installation and, if necessary, adjustment.
- replacement of slip-on solenoid coil, if present (solenoid coil type; see "Technical Data").
- inspection and, if necessary, replacement of the seals shown in the illustration. New seals must only be installed after being oiled or greased (seal kit; see "Technical Data").

Additional symbols

MDT42AK2NNY-5P-...

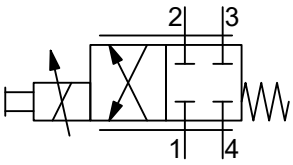

MDT42AK2NNY-5S-...

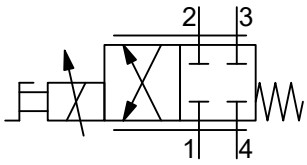

Dual flow-path

The dual flow paths allow a higher flow rate with low headloss. This requires connecting port 3 to port 4 and port 1 to port 2 in the manifold block in cavity AN.

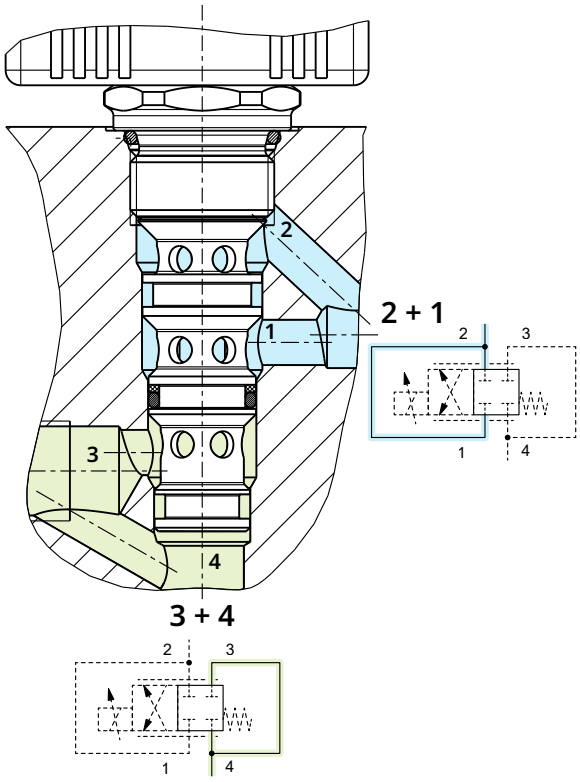

Air-bleeding

Bleed air from types "O" and "P":

1. Remove the knurled nut 1.
2. Loosen the cap nut 2 approx. 1.5 turns.

NOTE
Loosening the cap nut 2 allows oil to spray out.

3. Operate the valve until no more air bubbles escape.
4. Tighten the cap nut 2 (observe tightening torques M_A).
5. Remount the knurled nut 1.

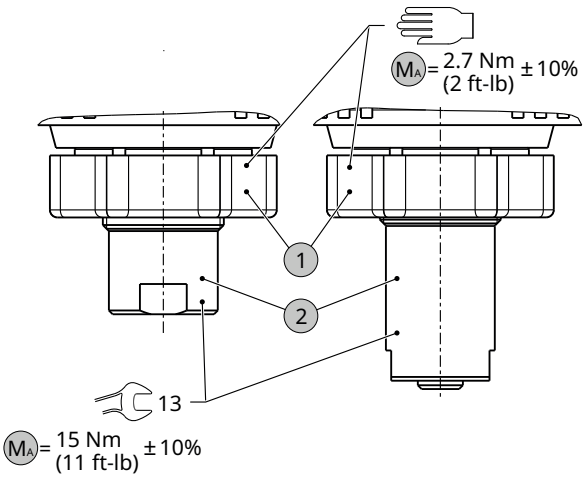

Bleed air from type "S":

1. Remove the protective cap 1.
2. Loosen the air-bleed screw 2 by 2 turns.
3. Operate the valve until no more air bubbles escape.
4. Tighten the air-bleed screw 2 (observe tightening torque M_A).
5. Remount the protective cap 1.

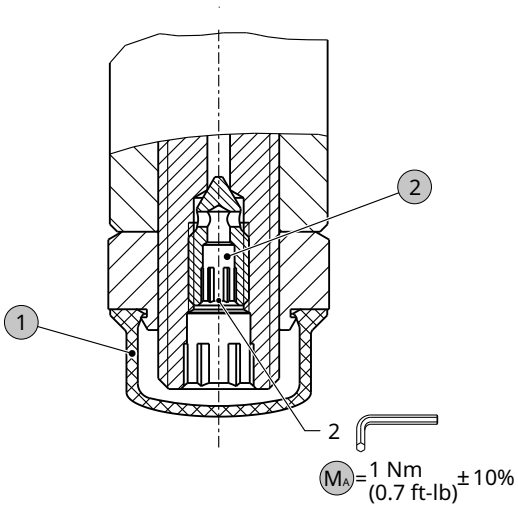

Emergency manual flow setting

The valve with the screw-type emergency override (Type “S”) includes an integrated emergency manual flow setting. The emergency manual flow setting allows the required flow rate to be adjusted mechanically in the event of a failure of the proportional solenoid.

INFO
The manual flow setting is not designed for adjusting the flow rate in a dynamic control mode.

Setting the flow rate manually:

1. Remove the protective cap 3.
2. Loosen the lock nut 1.
3. Screw in the adjusting spindle 2 until the required flow rate is set.
4. Tighten the lock nut 1 (observe tightening torques M_A).
5. Remount the protective cap 3.

Reset to factory settings:

✓ Prerequisite: Solenoid de-energized.

1. Remove the protective cap 3.
2. Loosen the lock nut 1.
3. Unscrew the adjusting spindle 2 to its end-stop, then screw it in 2 turns.
4. Tighten the lock nut 1 (observe tightening torque M_A).
5. Remount the protective cap 3.

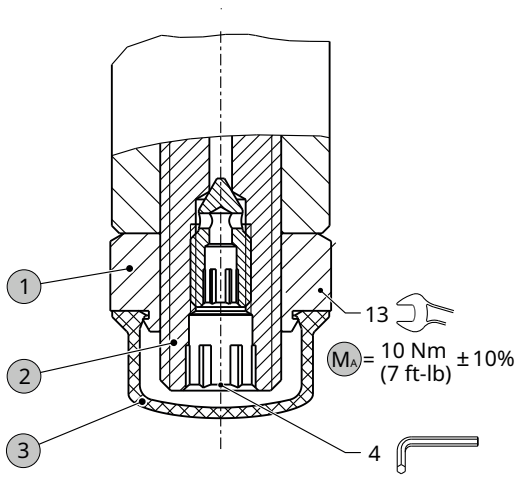

Application examples

Used with a bypass hydrostat

Application example with a bypass hydrostat

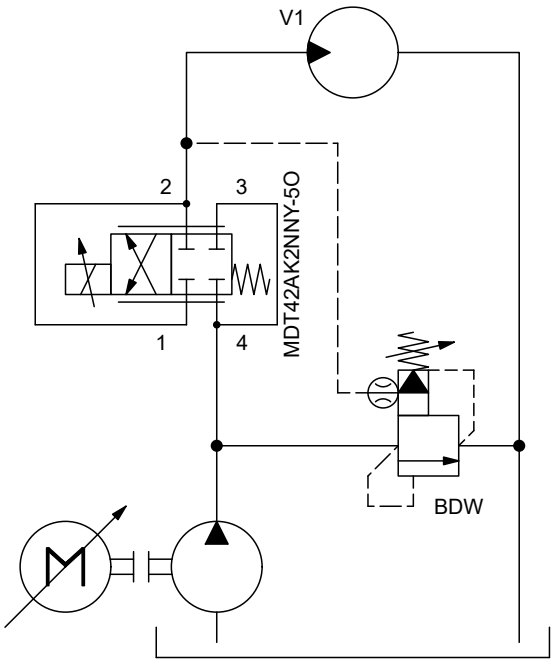

Classic combination

Classic combination with inline and bypass pressure-compensator cartridges

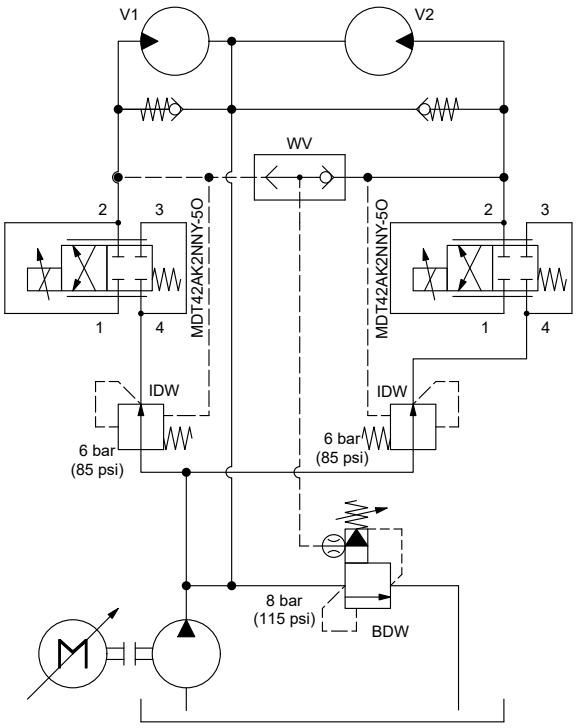

Ordering code

Ex. M D T 42 AK2N N Y - 5 O _ - 1 - 24 D - _ _

M	=	flow-control valve (throttle cartridge)
D	=	direct acting
T	=	electrically operated, COIL 36X48..., 30 W, Prop.
42	=	4-way/2-position
AK2N	=	AK2N spool with dual flow-path (de-energized closed)
N	=	cavity type AN
Y	=	only for use with pressure compensator
5	=	nominal size 05
O	=	without manual override (standard)
P	=	emergency override pin
S	=	emergency override screw-type
N	=	NBR (nitril-butadien-rubber / BUNA) seals (standard)
V	=	FKM (fluorocarbon rubber / VITON) seals (special seals on request)
1 ... 9	=	technical design no. (omit when ordering)
...	=	voltage e.g. 24 (24 V)
D	=	current DC
G	=	DIN EN 175301-803 connection — 3-pole 2 P+E (standard) — (IP 65)
J	=	Junior Timer plug connection — 2-pole radial — (IP 65)
JT	=	Junior Timer plug connection — 2-pole radial, with protection diode — (IP 65)
U	=	Deutsch plug connection DT04-2P — 2-pole radial — (IP 67/69K)
UR	=	Deutsch plug connection DT04-2P — 2-pole radial, with protection diode — (IP 67/69K)
(blank)	=	connection without mating plug (standard)
Q	=	only connection “G“ with mating plug

Related data sheets

Reference	Description
400-P-040011	form tools
400-P-040191	cavity AN
400-P-010101	MTTFd Values for Hydraulic Valves
400-P-120112	solenoid coil Coil 36X48-161

info.ch@bucherhydraulics.com **www.bucherhydraulics.com**

© 2026 by Bucher Hydraulics AG Frutigen, 3714 Frutigen, Switzerland

All rights reserved.
Data is provided for the purpose of product description only, and must not be construed as warranted characteristics in the legal sense. The information does not relieve users from the duty of conducting their own evaluations and tests. Because the products are subject to continual improvement, we reserve the right to amend the product specifications contained in this catalogue.