Flow valve
Throttle valve

Q_{max} = 45 l/min, p_{max} = 250 bar
Direct acting, spool type, proportional solenoid
Type series: MDRPA-CG-10-...

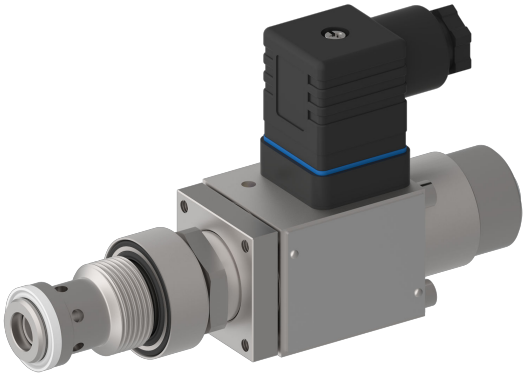

- Screw-in cartridge valve for cavity DC
- All external parts with zinc-nickel plating according to DIN EN ISO 19598
- Installation in threaded port body type DC-12
- High pressure wet-armature solenoids
- Various plug-connector systems and voltages are available

Symbol

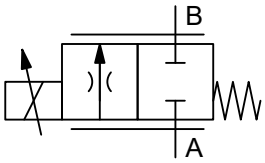

Description

The direct acting proportional throttle valve is a high-performance threaded screw-in cartridge valve in size 10. The valve is designed on the sliding-spool principle. When de-energized, the connection A to B is disabled. When energized, the flow rate from A to B can be adjusted in proportion to the change in the required value (current). In both mobile and industrial applications, these valves are the ideal choice for responsive and controlled lifting and lowering movements where large pressure differentials exist. The types "300" and "400" with nominal flow rates of 30 and 40 l/min must only be used in combination with an inline compensator or a bypass hydrostat (see "Technical Data").

Technical data

General characteristics	Description, value, unit
Function group	flow valve
Function	throttle valve
Design	screw-in cartridge valve
Controls	proportional solenoid
Characteristic	direct acting, spool type
Construction size	NG 10
Thread size	M24×1,5
Mounting attitude	unrestricted (preferably vertical, coil down)
Weight	1.15 kg
Cavity acc. factory standard	DC
Tightening torque steel	65 Nm
Tightening torque aluminium	50 Nm
Tightening torque tolerance	± 10 %
Minimum ambient temperature	- 30 °C
Maximum ambient temperature	+ 50 °C
Surface protection	all external parts with zinc-nickel plating according to DIN EN ISO 19598
Sealing material	see ordering code
Seal kit order number	NBR: DS-265-N / FKM: DS-265-V

Hydraulic characteristics	Description, value, unit
Maximum operating pressure	250 bar
Maximum flow rate	45 l/min
Nominal flow rate	Used with pressure-compensator cartridges: 40 l/min: max. Δp 9 bar 30 l/min: max. Δp 14 bar Used without pressure-compensator cartridges: 20 l/min 12 l/min
Flow direction	see symbol
Hydraulic fluid	HL and HLP mineral oil according to DIN 51 524; other fluids on request!
Minimum fluid temperature	- 30 °C
Maximum fluid temperature	+ 70 °C
Viscosity range	15 ... 380 mm^2/s (cSt)
Recommended viscosity range	20 ... 130 mm^2/s (cSt)
Minimum fluid cleanliness (cleanliness class according to ISO 4406:1999)	class 18/16/13

Electric characteristics	Description, value, unit
Actuator type	solenoid coil
Solenoid coils type	☐36
Supply voltage DC	12 V DC 24 V DC
Control current	12 V = 0...1400 mA 24 V = 0...700 mA
Relative duty cycle	100 %
Coil resistance R	cold value at 20°C: 12 V = 6.4Ω / 24V = 24.5Ω cold value at -25°C: 12 V = 5.2Ω / 24V = 20.0Ω max. warm value: 12 V = 10.0Ω / 24V = 38.4Ω
Inductance	Non-operated measured, at 0,1 mArms / 1 kHz 12 V = 13 mH / 24 V = 54 mH
Recommended PWM frequency	150...200 Hz
Response sensitivity with PWM	< 1 % I_{max}
Reproducibility with PWM	< 2 % Q_{nenn}
Hysteresis with PWM	2...4 % I_{max}
Reversal error with PWM	2...4 % I_{max}
Electrical connection coil	DIN EN 175301-803, 3-pole 2 P+E (IP 65)
Protection class solenoid coil to ISO 20 653 / EN 60 529	IP65, see Ordering code

Performance graphs

measured with oil viscosity 33.0 mm²/s (cSt)

Δp = f (Q) Pressure drop-flow rate characteristic

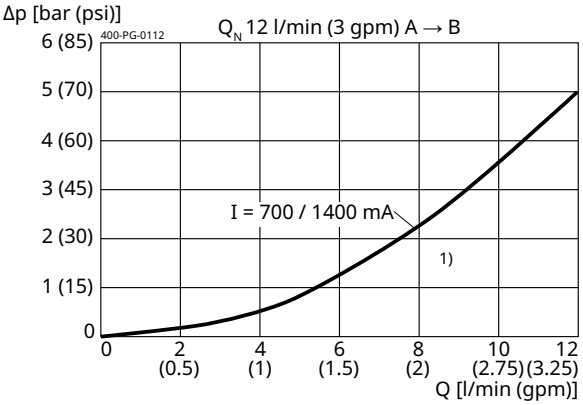

Δp = f (Q) Pressure drop-flow rate characteristic

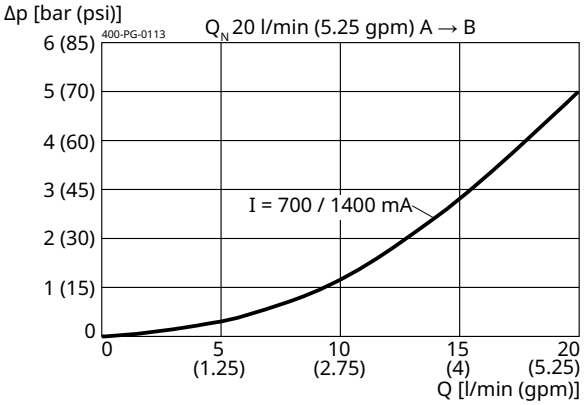

Δp = f (Q) Pressure drop-flow rate characteristic

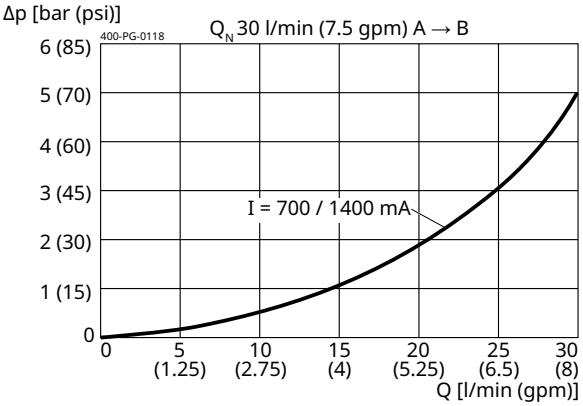

Δp = f (Q) Pressure drop-flow rate characteristic

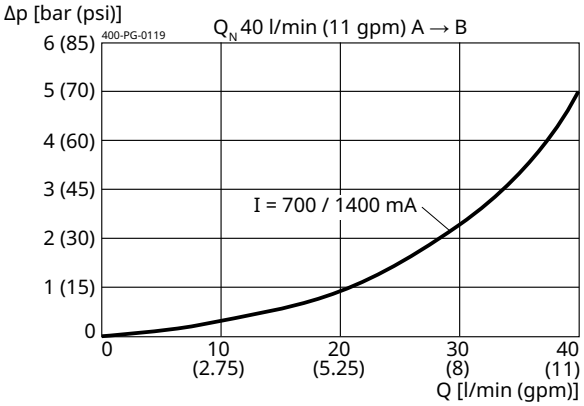

Q = f (Δp:I) Flow rate adjustment

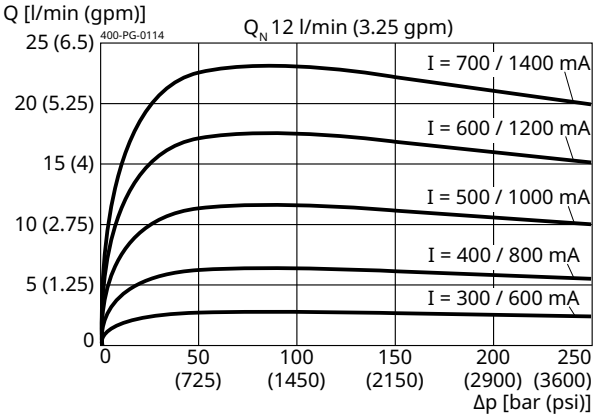

Q = f (Δp:I) Flow rate adjustment

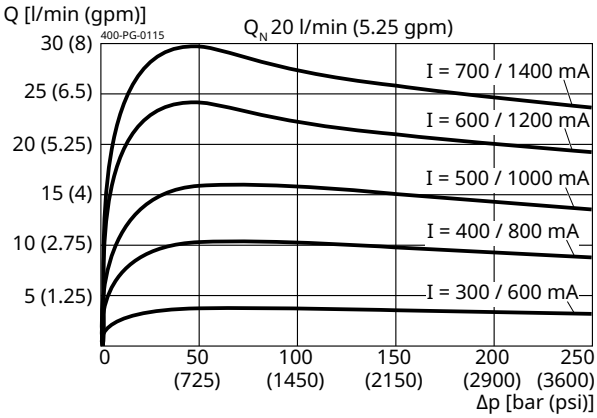

Q = f (Δp:I) Flow rate adjustment

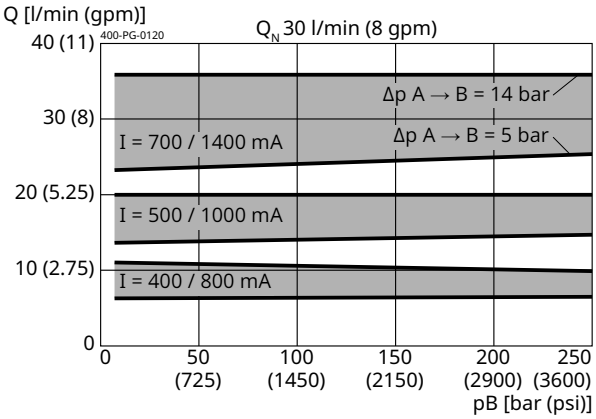

Q = f (Δp:I) Flow rate adjustment

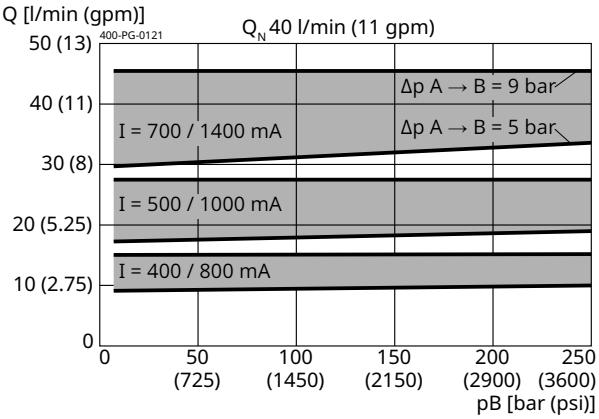

Q = f (I:Δp) Flow rate adjustment

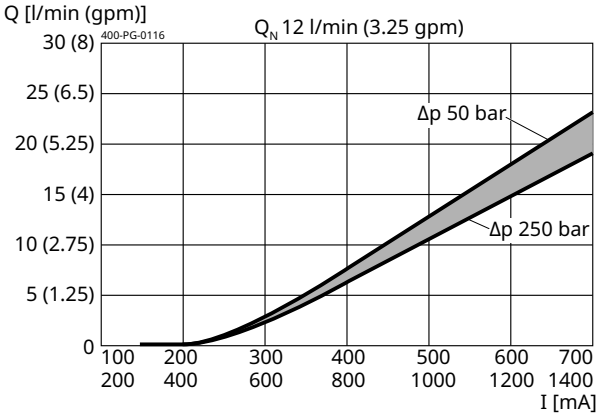

Q = f (I:Δp) Flow rate adjustment

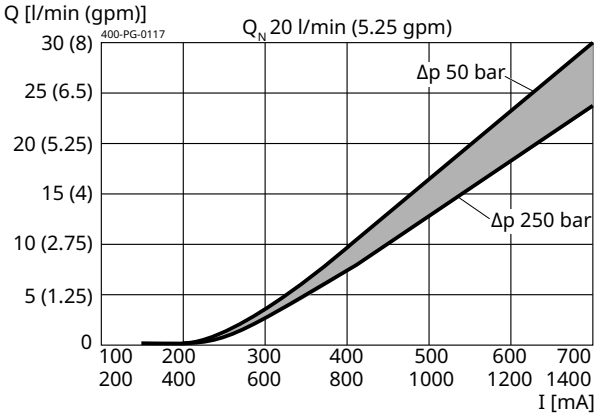

Q = f (I:Δp) Flow rate adjustment

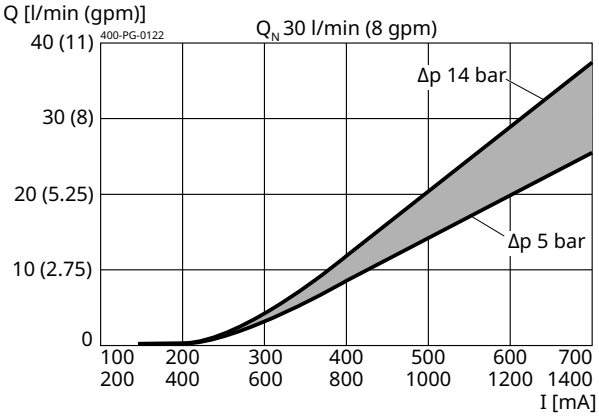

Q = f (I:Δp) Flow rate adjustment

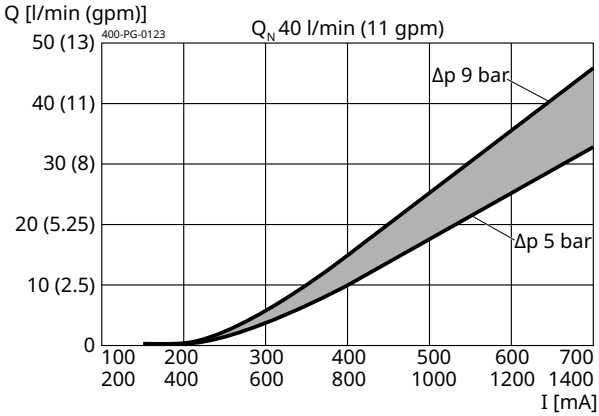

Installation

Beispiel für die Masseinheit:
Example for the dimensional units:

0.79 = 0.79 mm millimeter
(.031) = 0.031'' inch

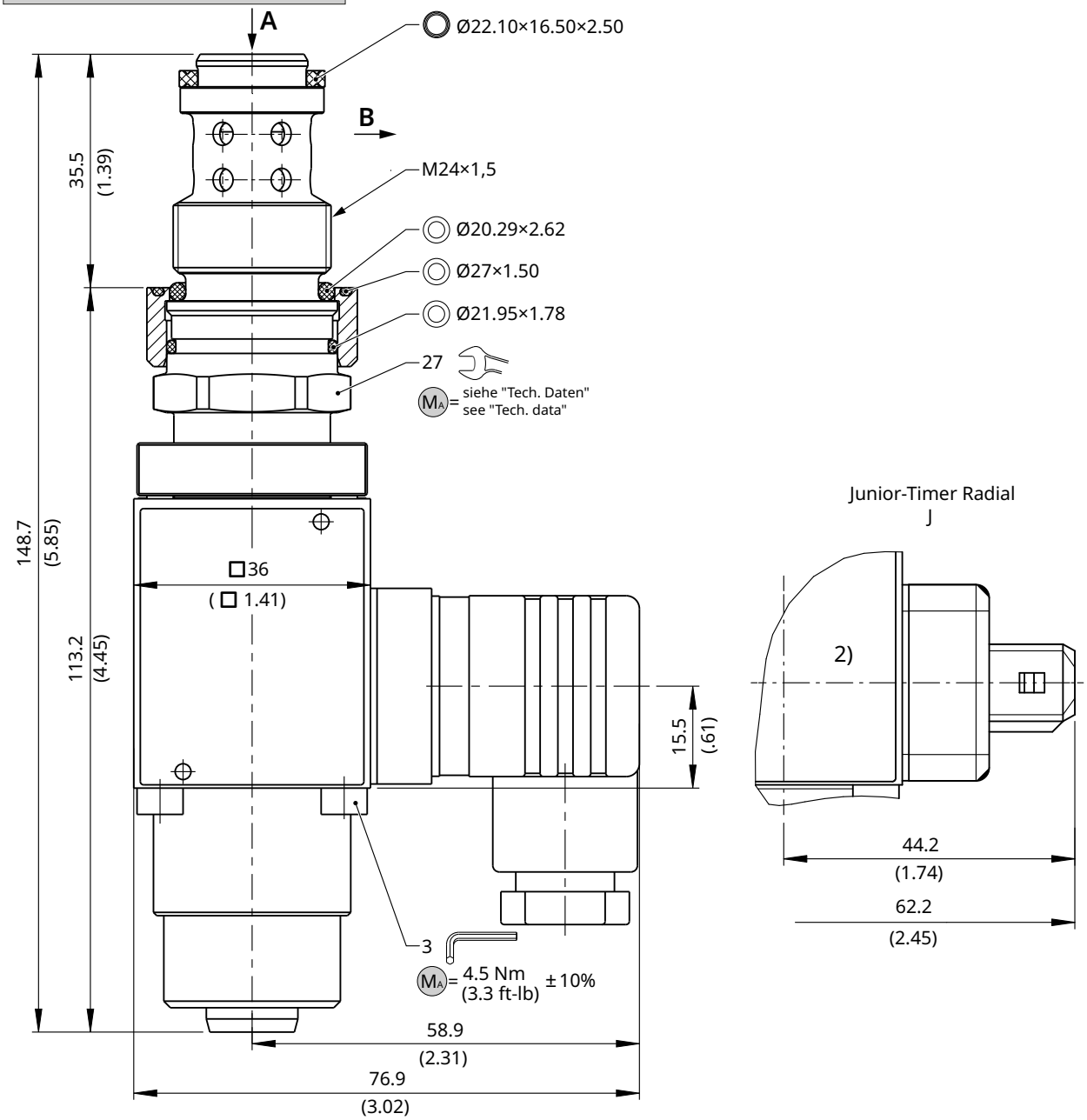

NOTE!

- Observe tightening torques M_A.
- Mount the valve preferably suspended (automatic air bleed).
- The valve is factory-set, no further adjustments are necessary.

ATTENTION!

Only qualified personnel with mechanical skills may carry out the following work:

- installation and, if necessary, adjustment.
- inspection and, if necessary, replacement of the seals shown in the illustration. New seals must only be installed after being oiled or greased (seal kit; see "Technical Data").

Solenoid orientation

1. Slightly loosen the mounting bolts 1.
2. Align the solenoid 2 so that the plug connector 3 is facing the required direction.
3.

INFO
Before tightening the mounting bolts 1, make sure there is an even gap 5 all around between the flange 4 and the solenoid 2.

Tighten the mounting bolts 1 on the flange 4 (observe tightening torque M_A).

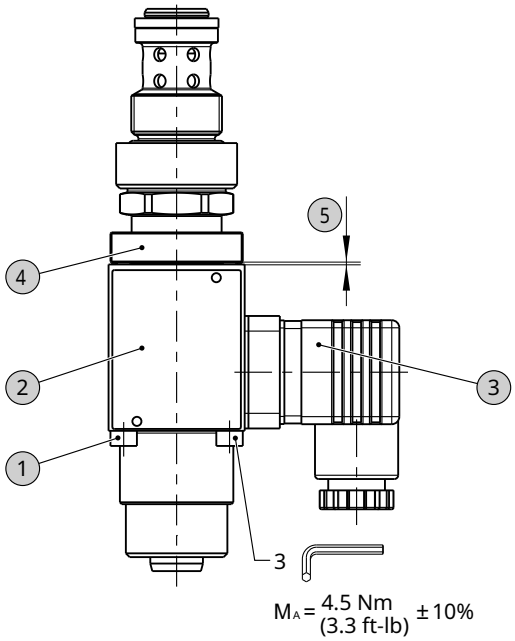

Application examples

Used without pressure compensator

The types "120" and "200" with nominal flow rates of 12 and 20 l/min (3.25 and 5.25 gpm) can be used in applications in which a maximum Δp from A to B of 250 bar (3600 psi) may occur.

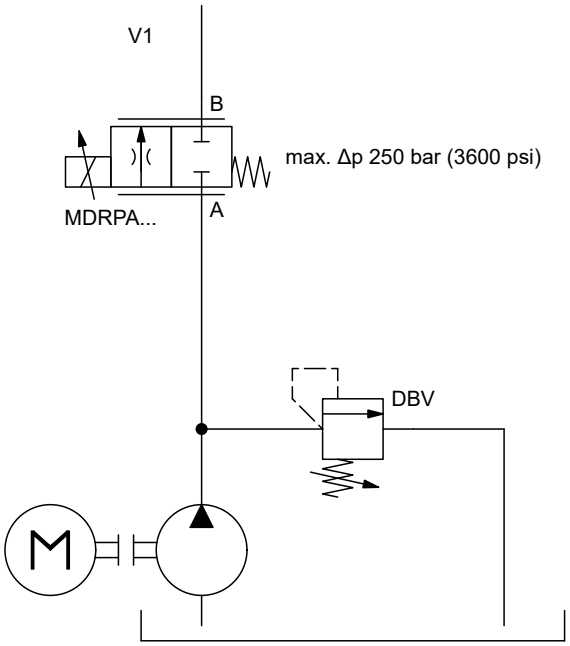

Used with pressure compensator

The types "300" and "400" with nominal flow rates of 30 and 40 l/min (8 and 11 gpm) must only be used in combination with pressure-compensator cartridges. A bypass compensator can also be used instead of an inline compensator:

- Q_N 30 l/min: max. Δp 14 bar (8 gpm: max. Δp 200 psi)
- Q_N 40 l/min: max. Δp 9 bar (11 gpm: max. Δp 130 psi)

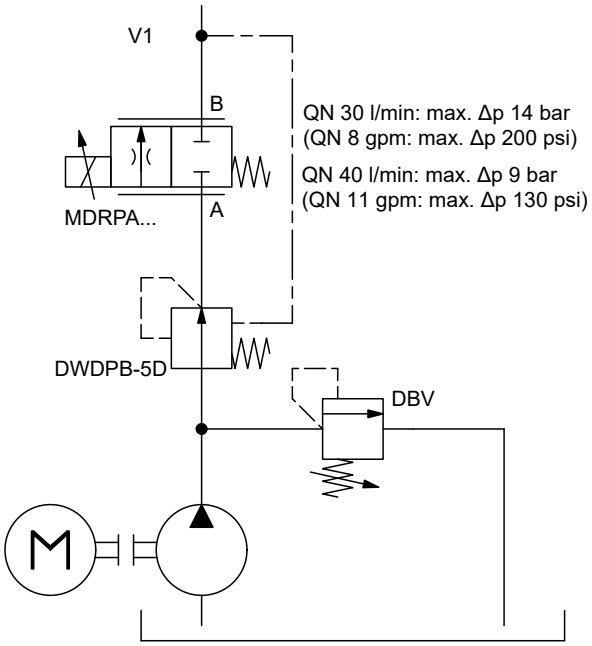

Ordering code

Ex. MD R P A - C G - 10 - 120 _ - 5 24 D _

MD	=	throttle valve, direct acting
R	=	proportional-solenoid operated
P	=	cartridge design
A ... Q	=	standard model according to valid data sheet
Z ... R	=	special model (on request)
C	=	cavity type DC
G	=	de-energized closed
10	=	nominal size 10
120	=	nominal flow rate = 12 l/min
200	=	nominal flow rate = 20 l/min
300	=	nominal flow rate = 30 l/min: max. Δp 14 bar
400	=	nominal flow rate = 40 l/min: max. Δp 9 bar
(blank)	=	NBR (nitril-butadien-rubber / BUNA) seals (standard)
V	=	FKM (fluorocarbon rubber / VITON) seals (special seals on request)
1 ... 9	=	technical design no. (omit when ordering)
...	=	voltage e.g. 24 (24 V)
D	=	current DC
(blank)	=	DIN EN 175301-803 mating plug 3-pole 2 P+E (standard, IP65)
M100	=	DIN EN 175301-803 connection, 3-pole 2 P+E (IP 65) } connection without mating plug
J	=	Junior Timer plug connection, 2-pole radial (IP 65) } connection without mating plug

HINWEIS!
Die Typen "300" und "400" mit Nennvolumenstrom 30 und 40 l/min dürfen nur in Kombination mit einer Inline- oder Bypass-Druckwaagepatrone eingesetzt werden (siehe "Technische Daten").

Related data sheets

Reference	Description
400-P-040011	form tools
400-P-060111	cavity DC
400-P-740101	threaded port body DC-12

info.ch@bucherhydraulics.com **www.bucherhydraulics.com**

© 2026 by Bucher Hydraulics AG Frutigen, 3714 Frutigen, Switzerland

All rights reserved.
Data is provided for the purpose of product description only, and must not be construed as warranted characteristics in the legal sense. The information does not relieve users from the duty of conducting their own evaluations and tests. Because the products are subject to continual improvement, we reserve the right to amend the product specifications contained in this catalogue.